IM-3000 Metallurgical Microscope

INSTRUCTION MANUAL

3601 E. 34th St. Tucson, AZ 85713 USA Tel. +1 520-882-6598 Fax +1 520-882-6599 email: pace@metallographic.com Web: http://www.metallographic.com

Equipment Type:	Metallurgical Microscope
Model:	***IM-3000***
Electrical Requirements:	110 / 220 Volts (single-phase)
Frequency:	50/60 Hz
Manual Revision Date:	April 17, 2014

Please read this instruction manual carefully and follow all installation, operating and safety guidelines.

3601 E. 34th St. Tucson, AZ 85713 USA Tel. +1 520-882-6598 Fax +1 520-882-6599 email: pace@metallographic.com Web: http://www.metallographic.com

Contents

	PAGE
Warranty	ii
1.0 Product Description	1
2.0 Unpacking, Shipping and Installation	3
3.0 Adjustments	12
4.0 Operation	15
5.0 Safety Guidelines	19
6.0 Maintenance	20
7.0 Trouble Shooting	21

3601 E. 34th St. Tucson, AZ 85713 USA Tel. +1 520-882-6598 Fax +1 520-882-6599 email: pace@metallographic.com Web: http://www.metallographic.com

WARRANTY

Terms and Conditions applying to all PACE Technologies Products

1. LIMITED WARRANTY AND DISCLAIMER:
PACE Technologies Products are warranted for one year from the purchase date to be free from defects in material and workmanship under correct use, normal operating conditions, and proper application. PACE Technologies obligation under this warranty shall be limited to the repair or exchange, at PACE Technologies option, of any PACE Technologies Product or part which proves to be defective as provided herein. PACE Technologies reserves the right to either inspect the product at Buyer's location or require it to be returned to the factory for inspection. Buyer is responsible for freight to and from factory on all warranty claims. The above warranty does not extend to goods damaged or subjected to accident, abuse or misuse after release from PACE Technologies warehouse, nor goods altered or repaired by anyone other than specifically authorized PACE Technologies representatives. PACE Technologies shall not in any way be responsible for the consequences of any alteration, modification or misuse unless previously approved in writing by an officer of PACE Technologies.

PACE TECHNOLOGIES MAKES NO EXPRESS WARRANTIES OTHER THAN THOSE WHICH ARE SPECIFICALLY DESCRIBED HEREIN. Any description of the goods sold hereunder, including any reference to Buyer's specifications and any description in catalogs, circulars and other written material published by PACE Technologies, is the sole purpose of identifying such goods and shall not create an express warranty that the goods shall conform to such description.

THIS WARRANTY IS EXPRESSLY IN LIEU OF ALL OTHER WARRANTIES, EXPRESSED OR IMPLIED. THERE ARE NO IMPLIED WARRANTIES OF MECHANTABILITY OR FITNESS FOR PARTICULAR PURPOSE. THIS WARRANTY STATES PACE TECHNOLOGIES ENTIRE AND EXCLUSIVE LIABILITY AND BUYER'S EXCLUSIVE REMEDY FOR ANY CLAIM FOR DAMAGES IN CONNECTIONS WITH PACE TECHNOLOGIES PRODUCTS. PACE TECHNOLOGIES WILL IN NO EVENT BE LIABLE FOR INCIDENTAL OR CONSEQUENTIAL DAMAGES WHATSOEVER, NOR FOR ANY SUM IN EXCESS OF THE PURCHASE PRICE.

2. LIABILITY CAP:
PACE Technologies maximum aggregate liability for loss and damage arising under, resulting from or in connection with the supply or use of the Equipment and Consumables provided under this purchase, or from the performance or breach of any obligation (s) imposed hereunder, whether such liability arises from any one or more claims or actions for breach of contract, tort, (including negligence), delayed completion, warranty, indemnity, strict liability or otherwise, unless otherwise limited by the terms hereof, shall be limited to one hundred percent (100%) of the purchase price.

3. DELIVERY:
Customer assumes and shall bear the risk of all loss or damage to the Products from every cause whatsoever, whether or not insured, and title to such Products shall pass to Customer upon PACE Technologies delivery of the Products to the common carrier of Pace Technologies choice, or the carrier specified in writing by Customer, for shipment to Customer. Any claims for breakage, loss, delay, or damage shall be made to the carrier by the Customer and Pace Technologies will render customer reasonable assistance in prosecuting such claims.

3601 E. 34th St. Tucson, AZ 85713 USA Tel. +1 520-882-6598 Fax +1 520-882-6599 email: pace@metallographic.com Web: http://www.metallographic.com

4. ACCEPTANCE:
Customer shall inspect the Products promptly upon receipt of delivery. Unless customer objects in writing within thirty (30) business days thereafter, customer shall be deemed to have accepted the Products. All claims for damages, errors, or shortage in Products delivered shall be made by Customer in writing within such five (5) business day period. Failure to make any claim timely shall constitute acceptance of the Products.

5. PAYMENT:
Customer agrees to provide timely payment for the Products in accordance with the terms of payment set forth on the reverse side hereof or in any proposal submitted herewith. If any payment is not paid on or before its due date, Customer shall pay interest on such late payment from the due date until paid at the lesser of 12% per annum or the maximum rate allowed by law.

6. DEFAULT:
If Buyer is in default (including, but not limited to, the failure by Buyer to pay all amounts due and payable to Seller) under the work or purchase order or any other agreement between Buyer and Seller, Buyer's rights under the warranty shall be suspended during any period of such default and the original warranty period will not be extended beyond its original expiration date despite such suspension of warranty rights.

7. MISCELLANEOUS PROVISIONS:
This agreement has been made in and shall be governed by the laws of the State of Arizona. These terms and conditions and the description of the Products on the reverse side hereof or in any proposal submitted herewith constitute the entire agreement and understanding of the parties with respect to this sale and supersede all prior and contemporaneous agreements or understandings, inducements or representations, expressed or implied, written or oral, between the parties with respect hereto. Any term or provision of this Agreement may be amended, and any observance of any term of this Agreement may be waived, only by a writing signed by the party to be bounds. The waiver by a party of any breach shall not be deemed to constitute a waiver of any other breach. Should suit be brought on this Agreement, the prevailing party shall be entitled to recover its reasonable attorneys' fees and other costs of suit including costs and attorneys' fees incurred on appeal or in collection of any judgment.

3601 E. 34th St. Tucson, AZ 85713 USA Tel. +1 520-882-6598 Fax +1 520-882-6599 email: pace@metallographic.com Web: http://www.metallographic.com

1.0 Product Description

IM-3000 Inverted Metallurgical Microscope

Bright-field illumination

The IM-3000 is a basic inverted metallurgical microscope featuring bright-field illumination, binocular eyepiece tubes and a digital camera port. The IM-3000 inverted microscope is an excellent choice for a multipurpose economical metallurgical microscope. Objectives range from 4X, 10X, 20X and 40X with wide field 10X eyepieces.

Figure 1. IM-3000 metallurgical microscope

3601 E. 34th St. Tucson, AZ 85713 USA Tel. +1 520-882-6598 Fax +1 520-882-6599 email: pace@metallographic.com Web: http://www.metallographic.com

1.1 Technical Specifications

Electrical specifications:	110 / 220V single-phase (50/60 Hz)
Optical system:	Infinity optical system
Viewing head:	Binocular head inclined 45 degrees
Light intensity ratio:	Observing 80%, camera 20% Observing 100%, or camera 100%
Eyepieces:	Wide field eyepiece EW10X/20mm\
Nosepiece:	Quintuple nosepiece
Objective:	Plan achromatic objective: 4× (N.A 0.1) 10× (N.A 0.25) 20× (N.A 0.4) 40× (N.A 0.6)
Focus:	Coaxial Coarse and Fine Focusing adjustment ,Vertical Objective Movement , Coarse Stroke:37.7 mm per rotation, Fine Stroke: 0.2mm per rotation
Stage:	X-Y stage control
Illumination:	Halogen Lamp 6V 30W, Preset Center, Intensity Continuously Adjustable
Filters:	Blue, Yellow, Green and Ground Glass
Dimensions (WxHxD):	9” x 22” x 25” (229 x 560 x 635 mm)

3601 E. 34th St. Tucson, AZ 85713 USA Tel. +1 520-882-6598 Fax +1 520-882-6599 email: pace@metallographic.com Web: http://www.metallographic.com

1.2 Features and Benefits

The ***IM-3000*** metallurgical microscope provides brightfield (BF) illumination. The **IM-3000** metallographic microscope is a powerful optical tool for the metallographer and metallurgist.

2.0 Unpacking, Shipping and Installation

2.1 Unpacking

Unit is delivered in a box. Unpack and check for completeness of parts.

Measures WxHxD: (box). 18x18x27-inches

Weight: Varies, depending upon model (approximately 35 lbs).

2.2 Shipping

When moving box, lift from bottom.

! **Caution: Very** sensitive optical instrumentation. Take care to avoid bodily injury and damage to the unit.

3601 E. 34th St. Tucson, AZ 85713 USA Tel. +1 520-882-6598 Fax +1 520-882-6599 email: pace@metallographic.com Web: http://www.metallographic.com

2.3 Installation

! Install unit carefully! Improper installation voids warranty.

The ***IM-3000 metallographic microscope*** should be placed on a flat stable surface. Requires electrical connection.

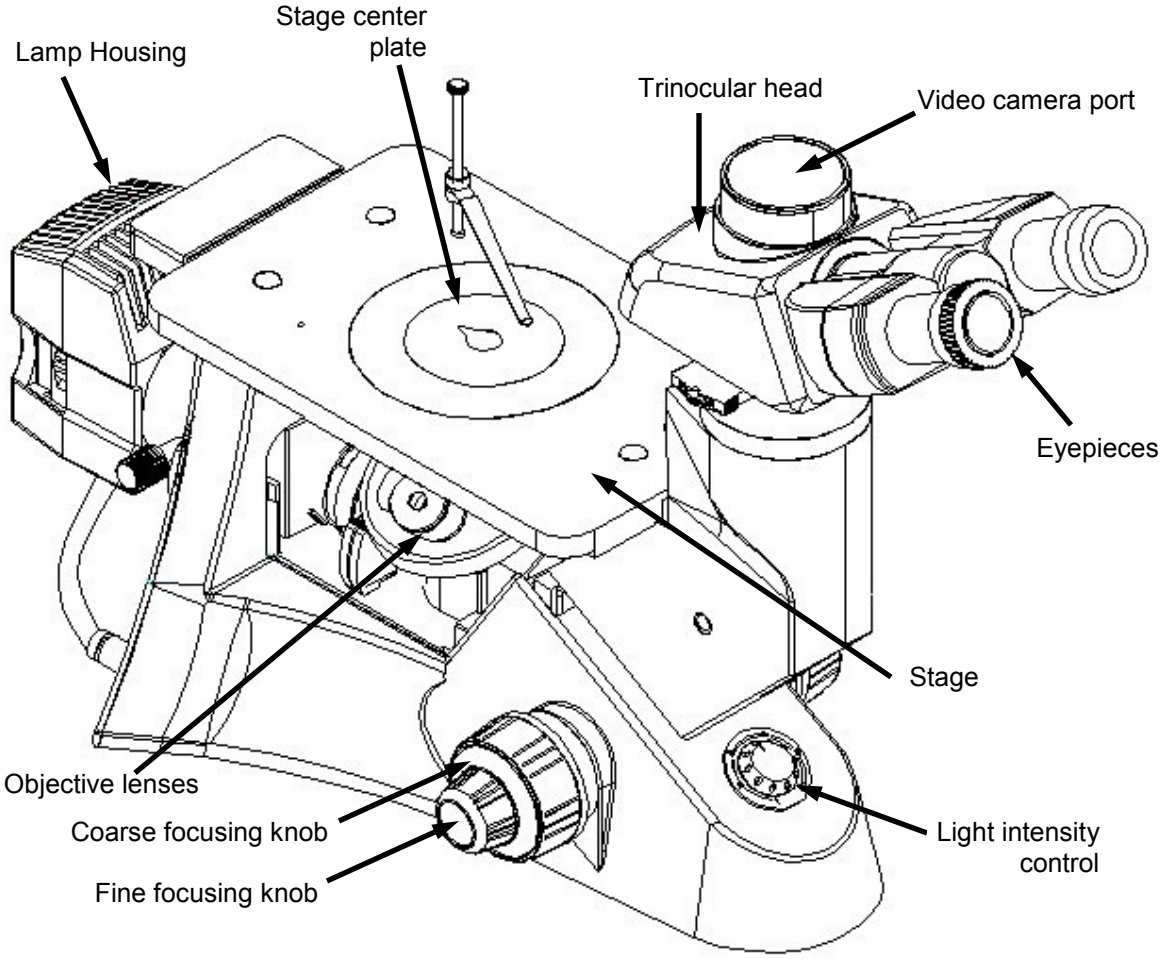

Figure 2a. Overview of IM-3000 metallurgical microscope

3601 E. 34th St. Tucson, AZ 85713 USA Tel. +1 520-882-6598 Fax +1 520-882-6599 email: pace@metallographic.com Web: http://www.metallographic.com

2.3 Installation (conti.)

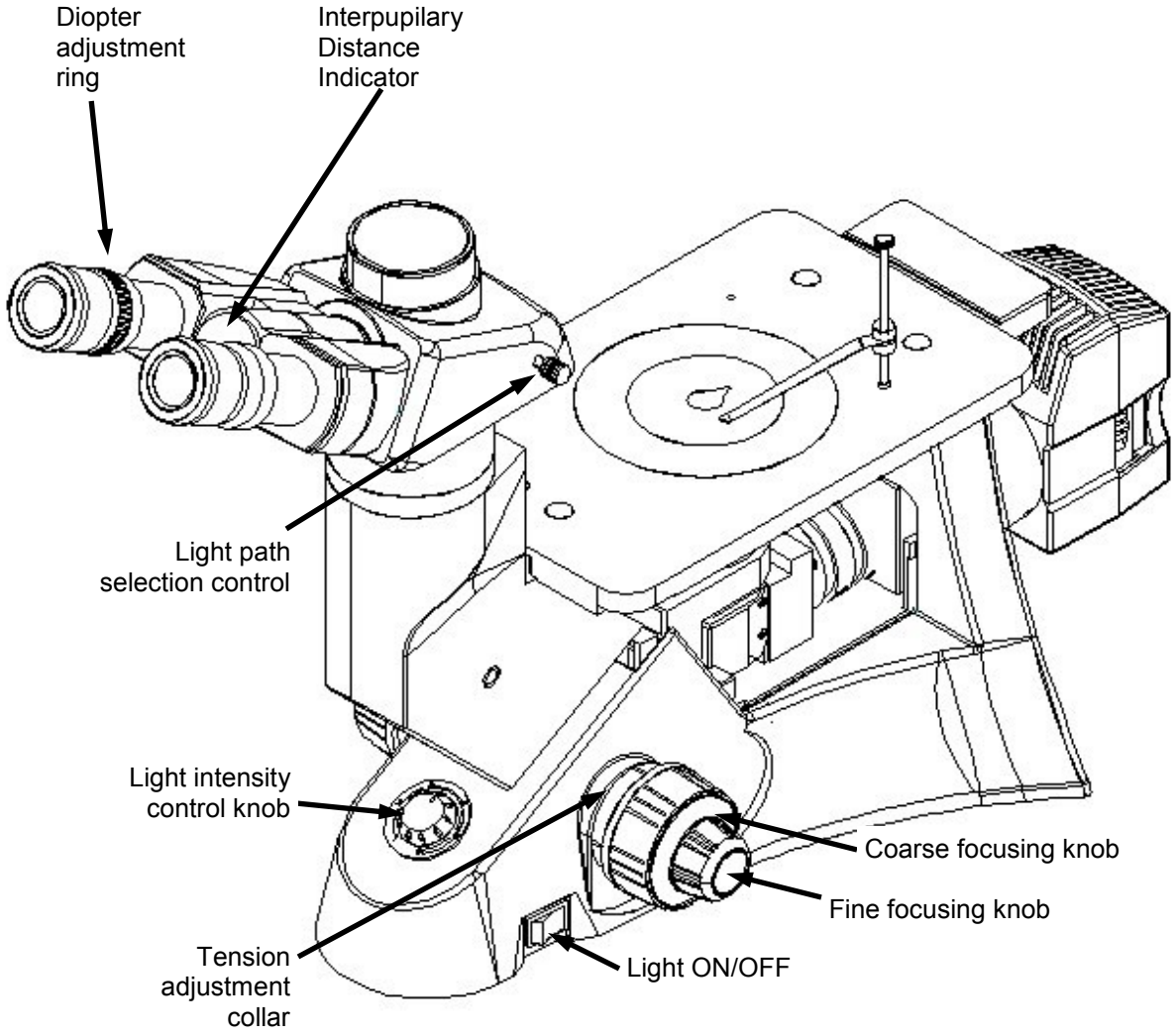

Figure 2b. Overview of IM-3000 metallurgical microscope

3601 E. 34th St. Tucson, AZ 85713 USA Tel. +1 520-882-6598 Fax +1 520-882-6599 email: pace@metallographic.com Web: http://www.metallographic.com

2.3 Installation (conti.)

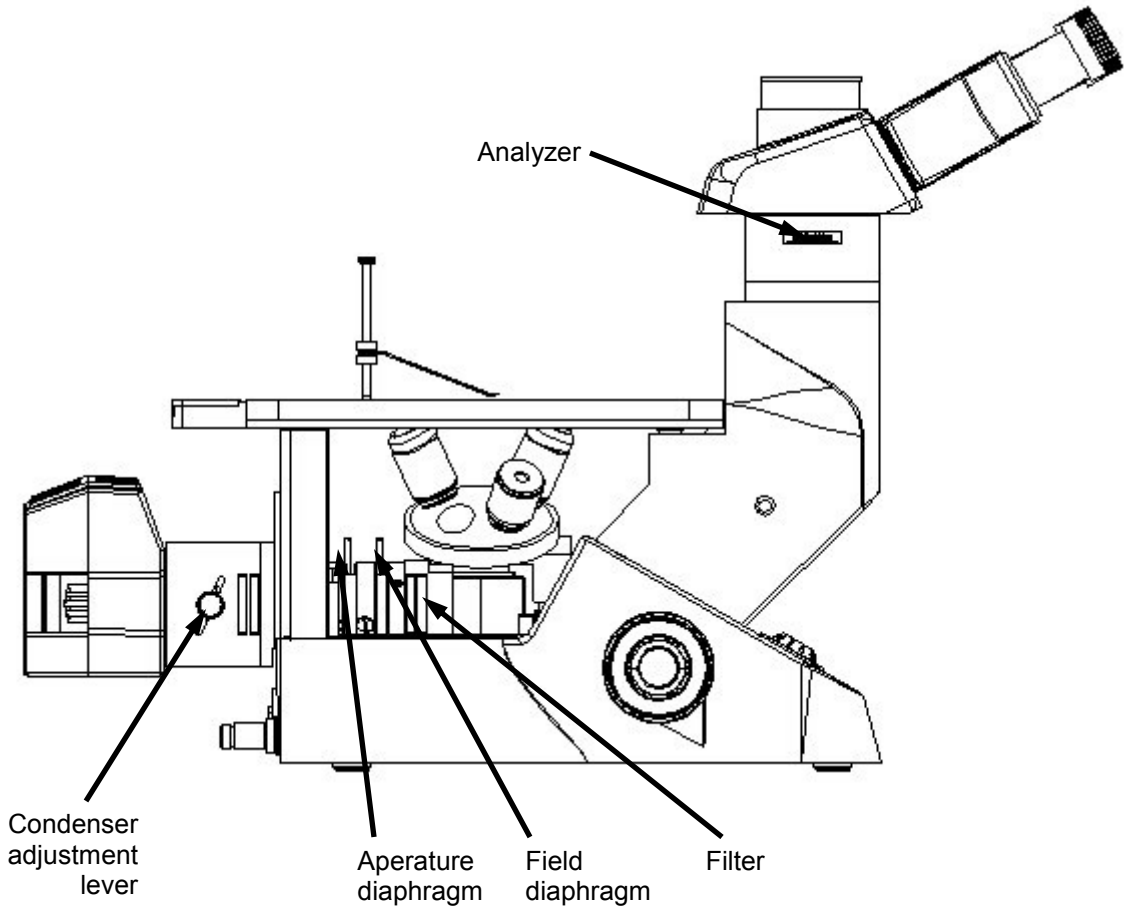

Figure 2c. Overview of IM-3000 metallurgical microscope

3601 E. 34th St. Tucson, AZ 85713 USA Tel. +1 520-882-6598 Fax +1 520-882-6599 email: pace@metallographic.com Web: http://www.metallographic.com

2.3.1 Sequence for Assembly

2.3.1.1 Installing Objectives

-Before assembling objectives into turret, spray with clean dry air to remove dust. If necessary use IPA to clean any heavier debris.

-Screw in lowest magnification objective and then rotate turret clockwise and insert next higher magnification objective.

-Add remaining objectives.

-If there are any remaining holes in turret cover with dust cap.

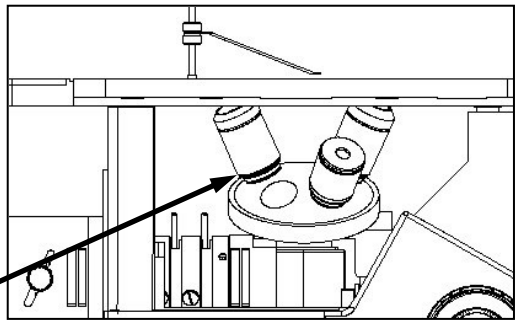

Figure 3. Objective turret

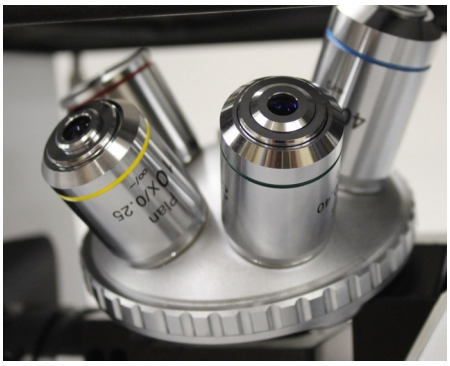

2.3.1.2 Adjust focusing knob tension (if necessary)

Focusing knob tension is pre-set at the factory, however, it can be adjusting by turning the focusing adjustment collar.

Figure 4. Focus tension collar

3601 E. 34th St. Tucson, AZ 85713 USA Tel. +1 520-882-6598 Fax +1 520-882-6599 email: pace@metallographic.com Web: http://www.metallographic.com

2.3 Installation (continued)

2.3.1.3 Installing and Replacing Bulb

Requires Halogen Lamp (6V 30W)

! Caution: Bulb and lamp housing can get very hot. Turn off power and let cool before removing or replacing.

1. Let bulb and housing cool before removing

2. Firmly grasp bulb (1) with a piece of gauze or other protective material. Insert bulb pins into pin holes (4) on the lamp house (Figure 5). Be sure bulb is inserted completely into socket.

3. Align pin 2 with socket 3 (Figure 6) to lock lamp housing together.

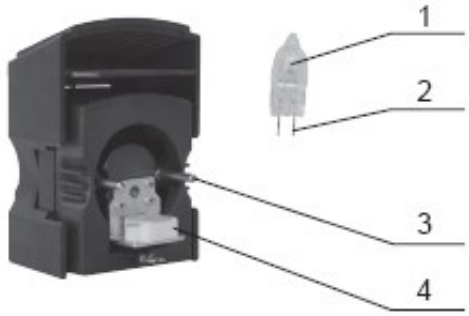

Figure 5. Bulb replacement

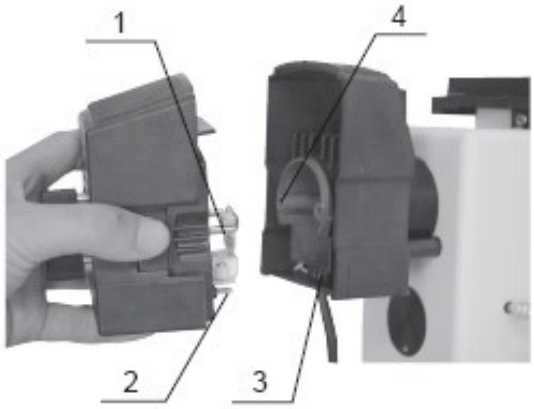

Figure 6. Housing Assembly

! Caution: Use cotton gloves when handling light bulb. Do not touch with fingers as oil from fingers can significantly reduce the life of the bulb.

3601 E. 34th St. Tucson, AZ 85713 USA Tel. +1 520-882-6598 Fax +1 520-882-6599 email: pace@metallographic.com Web: http://www.metallographic.com

2.3 Installation (continued)

2.3.1.4 Eyepiece assembly

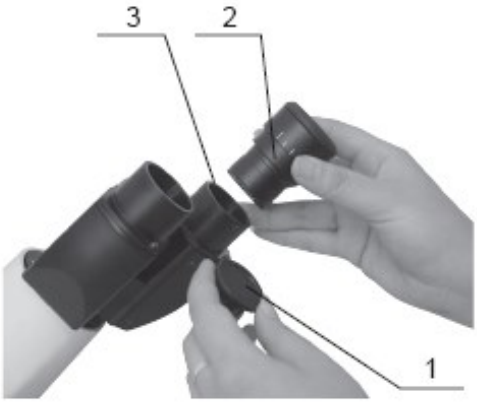

Figure 7. Eyepiece assembly

1. Remove protective cap
2. Insert eyepiece into tube
3. Adjust eyepiece to set focus on eyepiece scale, focus on sample and adjust other eyepiece so both eyepieces have in the same focus.

2.3.1.5 X-Y stage assembly

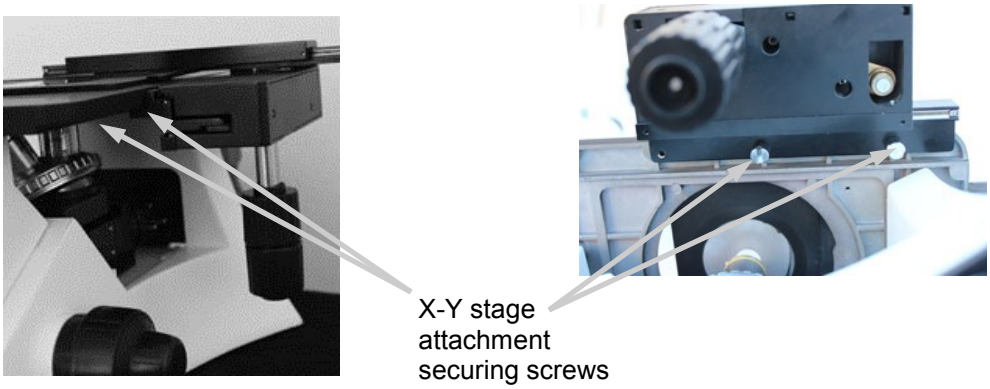

3601 E. 34th St. Tucson, AZ 85713 USA Tel. +1 520-882-6598 Fax +1 520-882-6599 email: pace@metallographic.com Web: http://www.metallographic.com

2.3 Installation (continued)

2.3.1.5 Auxiliary stage assembly

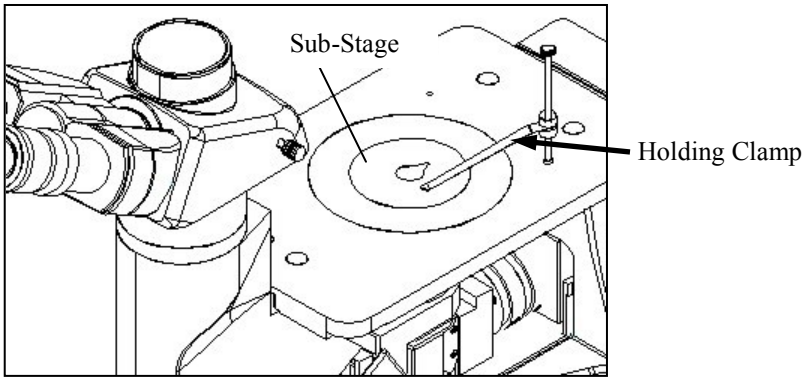

Figure 8. Stage plate assembly

Three different stage plates are supplied with the **IM-3000** metallographic microscope. Insert into ring on top of primary stage.

The auxiliary stages can be rotated to square up the specimen.

2.3.1.6 Power connections

Figure 9. Power connection

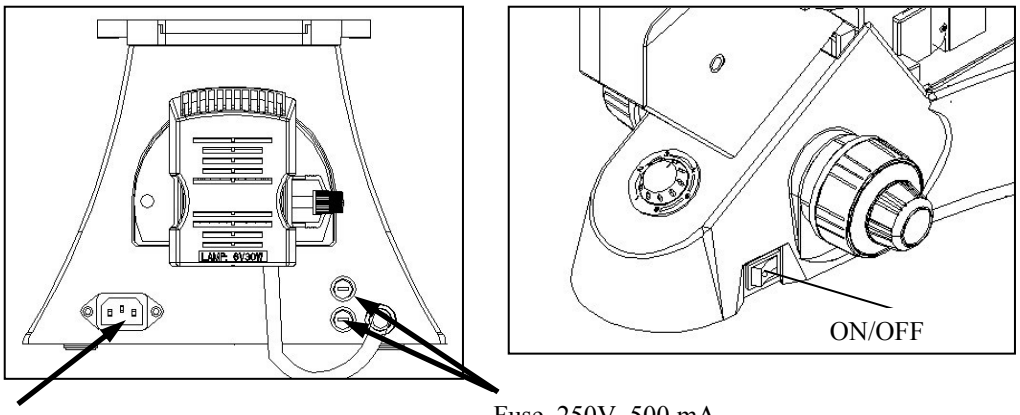

3601 E. 34th St. Tucson, AZ 85713 USA Tel. +1 520-882-6598 Fax +1 520-882-6599 email: pace@metallographic.com Web: http://www.metallographic.com

2.3.1.7 Filters

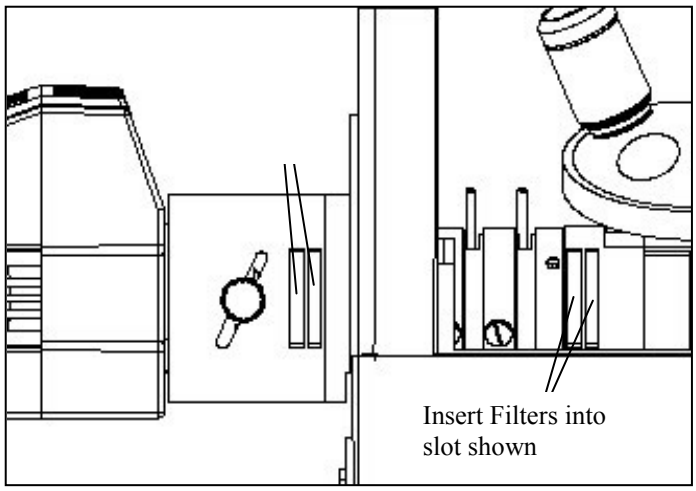

Figure 10. Filter installation

2.3.1.8 Polarizer

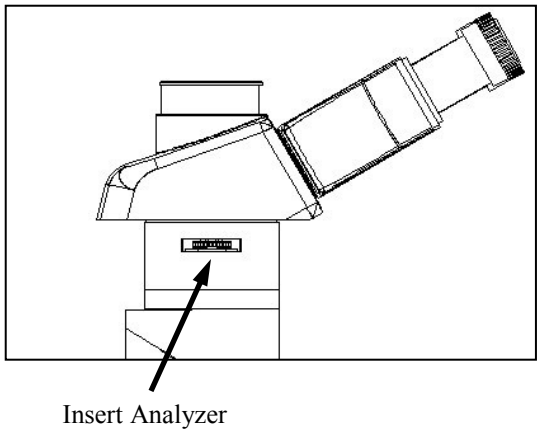

Figure 11. Analyzer installation

3601 E. 34th St. Tucson, AZ 85713 USA Tel. +1 520-882-6598 Fax +1 520-882-6599 email: pace@metallographic.com Web: http://www.metallographic.com

3.0 Adjustments

3.0.1 Illumination

1. Adjust light bulb so that the field of view is bright and even.

2. If there is a shadow from the filament, adjust the condenser knob to remove shadow.

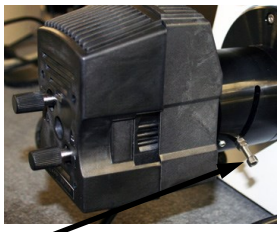

1. Change light condenser so the edges of the light can be seen

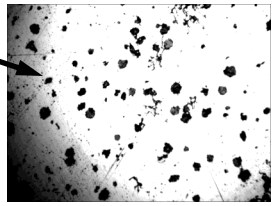

2. Center light intensity with knobs on back on light housing

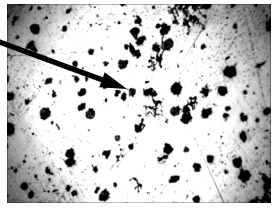

Filament Alignment

3. Open or adjust light condenser lens to even out light intensity across the field

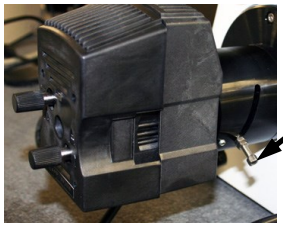

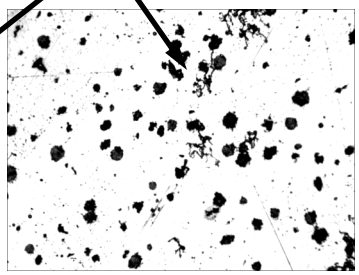

3601 E. 34th St. Tucson, AZ 85713 USA Tel. +1 520-882-6598 Fax +1 520-882-6599 email: pace@metallographic.com Web: http://www.metallographic.com

3.0.1 Illumination (conti.)

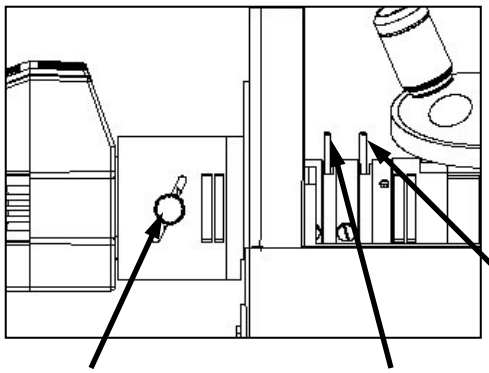

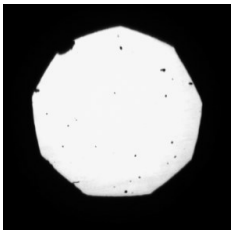

Field diaphragm viewed through eyepiece

3. Adjust the field and aperature diaphragms to obtain the sharpest image

> ★ **Aperture Diaphragm: controls the aperture angle of the incident ray. The diaphragm is adjusted properly when the incident rays fill the objective lens. In this case, the contrast and sharpness of the image will be the best. It is recommended that aperture diaphragm be adjusted each time the objective is changed.**
>
> ★ **Field Diaphragm: controls the size of the field of view which reduces the reflected rays of the tube and glare. This increases the contrast of image. Generally, the field diaphragm is properly set when the rays just fill the field of view in the eyepiece.**

3601 E. 34th St. Tucson, AZ 85713 USA Tel. +1 520-882-6598 Fax +1 520-882-6599 email: pace@metallographic.com Web: http://www.metallographic.com

3.0 Adjustments (conti.)

3.0.2 Eyepiece Diopter Adjustment

-Adjust the focus of the right eyepiece using the coarse and fine adjustment knobs.

-Adjust the focus of the left eyepiece to match the focus by turning the diopter adjustment ring.

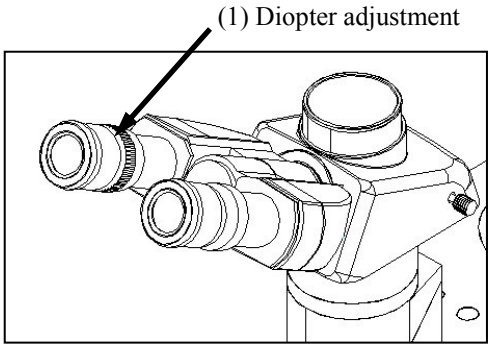

★ There are ±5 diopters on the diopter adjustment ring. The number which the reticle on the eyepiece holder points to is your eye's diopter graduation

3.0.3 Interpupillary Distance Adjustment

-Adjust the interpupillary distance so that the left and right fields of view coincide completely.

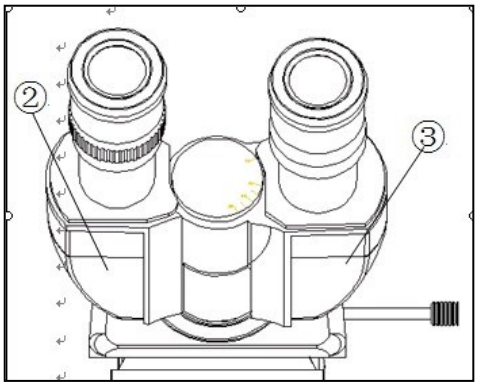

★ The scale on the interpupillary distance indicator, pointed by the dot "." on the eyepiece holder, shows the interpupillary distance.

The range of the interpupillary distance：48～75mm。

3601 E. 34th St. Tucson, AZ 85713 USA Tel. +1 520-882-6598 Fax +1 520-882-6599 email: pace@metallographic.com Web: http://www.metallographic.com

4.0 Operation

4.1 Lamp operation

1. Turn on main power switch.

2. Rotate knob to adjust intensity of light

NOTE: Reducing the intensity of the bulb will prolong the life of the bulb. Also when using the microscope turn down the intensity but do not turn off when on stand-by (this keeps the bulb warm and does not shock it by constantly turning it on and off)

4.2 Focusing

1. Adjust the tension for the focusing knob with the collar next to the microscope base

   Turn counter clockwise (CCW) to increase tension

   Turn clockwise (CW) to decrease tension

2. Adjust coarse focus with larger knob

3. Adjust fine focus with smaller outside knob

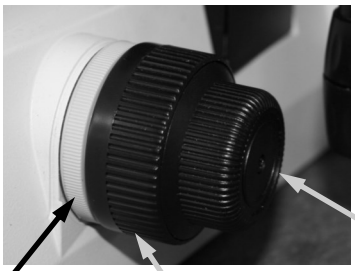

3601 E. 34th St. Tucson, AZ 85713 USA Tel. +1 520-882-6598 Fax +1 520-882-6599 email: pace@metallographic.com Web: http://www.metallographic.com

4.3 Mechanical Stage

Place sample on sub-stage (interchangeable)

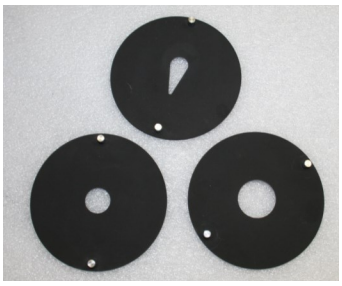

Microscope sub-stages

4.4 Light path control knobs

Slide the light path selector lever (1) to the right until it clicks into place to change the light path to the upper camera port.

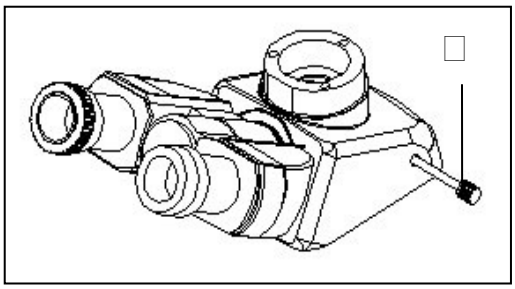

4.5 Digital camera attachment

1. Remove dust cover (2)
2. Attach the c-mount camera adapter (3) to the trinocular head
3. Adjust the focus and position of the camera and lock it down with the locking screw (1)

The magnification of the image = magnification of objective x adapter magnification

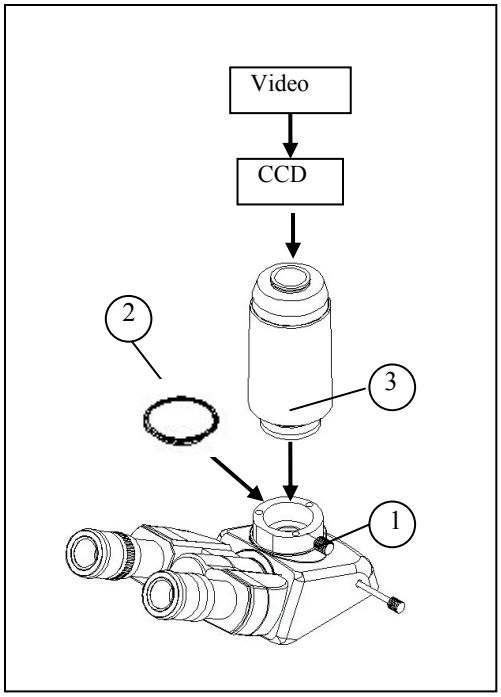

3601 E. 34th St. Tucson, AZ 85713 USA Tel. +1 520-882-6598 Fax +1 520-882-6599 email: pace@metallographic.com Web: http://www.metallographic.com

4.6 Filters

Green filter Monochrome contrast filter.

Ground glass: Diffuses filament image to produce more uniform lighting.

Blue: Used for lower light setting to compensate for the lower temperature of the light (reduces the yellow-orange color for daylight photographic film).

Yellow: Monochrome contrast filter.

Gray: Monochrome contrast filter.

4.7 Objective Lens

Magnification	Numerical Aperature (N.A.)	Working Distance (mm)	Conjugate Distance (mm)
4X	0.1	25.4	∞
10X	0.25	11	∞
20X	0.4	6	∞
40X	0.6	3.7	∞

3601 E. 34th St. Tucson, AZ 85713 USA Tel. +1 520-882-6598 Fax +1 520-882-6599 email: pace@metallographic.com Web: http://www.metallographic.com

4.7 Illumination Techniques

BRIGHTFIELD: Brightfield (B.F.) illumination is the most common illumination technique for metallographic analysis. The light path for B.F. illumination is from the source, through the objective, reflected off the surface, returning through the objective, and back to the eyepiece or camera. This type of illumination produces a bright background for flat surfaces, with the non-flat features (pores, edges, etched grain boundaries) being darker as light is reflected back at a different angle.

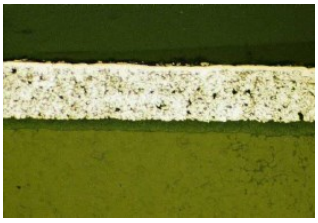

DARKFIELD (no available on this microscope): Darkfield (D.F.) illumination is a lesser known but powerful illumination technique. The light path for D.F. illumination is from the source, down the outside of the objective, reflected off the surface, returned through the objective and back to the eyepiece or camera. This type of illumination produces a dark background for flat surfaces, with the non-flat features (pores, edges, etched grain boundaries) being brighter as light is reflected at an angle back into the objective (not available on the IM-3000).

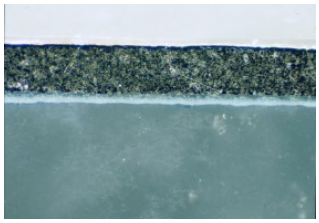

DIC (not available on this microscope): Differential Interference Contrast (DIC) is a very useful illumination technique for providing enhanced specimen features. DIC uses a Normarski prism along with a polarizer in the 90° crossed positions. Essentially, two light beams are made to coincide at the focal plane of the objective, thus rendering height differences more visible as variations in color (not available on the IM-3000)..

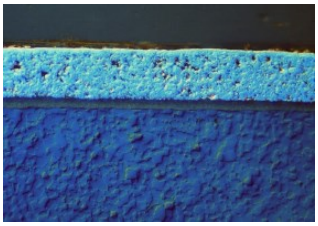

3601 E. 34th St. Tucson, AZ 85713 USA Tel. +1 520-882-6598 Fax +1 520-882-6599 email: pace@metallographic.com Web: http://www.metallographic.com

5.0 Safety Guidelines

5.1 Warning Sign

! This sign points to special safety features on the instrument.

5.2 Safety Precautions

! Careful attention to this instruction manual and the recommended safety guidelines is essential for the safe operation of the **IM-3000** ***metallographic microscope***.

! Proper operator training is required for operation of the **IM-3000** ***metallographic microscope***. Any unauthorized mechanical and electrical change, as well as improper operation, voids all warranty claims. All service issues need to be reported to the manufacturer / supplier.

! Operate unit as specified in this manual.

! Disconnect power before opening unit.

! Let lamp and lamp house cool before changing bulb.

! When unit is not in use turn light bulb power down slowly to cool before turning off power.

5.3 Emergency Statement

The **IM-3000** ***metallographic microscope*** has been designed for analyzing metallographic specimens. Always follow proper operational guidelines and avoid contact with moving lubricants and abrasives. .

3601 E. 34th St. Tucson, AZ 85713 USA Tel. +1 520-882-6598 Fax +1 520-882-6599 email: pace@metallographic.com Web: http://www.metallographic.com

6.0 Maintenance

6.1 Introduction

The **IM-3000** ***metallographic microscope*** requires very minimal maintenance. To keep the unit clean cover with microscope cover after use.

6.2 Cleaning lenses

Use only an alcohol such as IPA for cleaning the objectives and eyepieces.

6.3 Replacing light bulb

Do not touch the light bulb with figures directly, the oil on the skin will significantly reduce the life of the light bulb. Use cotton gloves.

-Remove light bulb casing by pulling off the housing (straight back)

-Remove old light bulb. Be careful if the bulb recently burned out as it may still be hot.

- Install new bulb, make sure it is pushed all the way down, otherwise it may not be possible to focus the light.

- Using the two alignment knobs on the back of the housing, center the bulb and make fine adjustment.

Remove housing cover by pulling it apart

Insert new bulb and make sure it is completely pushed down to the base

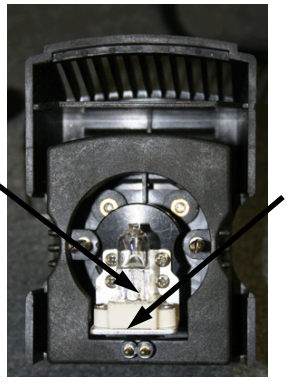

Using adjustment knobs on back of housing center the bulb and then adjust

3601 E. 34th St. Tucson, AZ 85713 USA Tel. +1 520-882-6598 Fax +1 520-882-6599 email: pace@metallographic.com Web: http://www.metallographic.com

7.0 Trouble Shooting (Optical Path)

More extensive trouble shooting, repair guides, video's, parts list are provided online at www.metallographic.com or http://www.metallographic.com/PACE-service/IM-3000-service.html

Problem	Cause	Solution
Bulb lights but the field is dark	a. The aperature or field diaphragm is closed. b. Analyzer and polarizer are engaged in light path. c. Light path selector knob for trinocular tube is not positioned properly d. Mirror selector lever is in an intermediate position	a. Open the aperature and field iris diaphragms. b. Disengage them from light path. c. Fully pull out the light path selector knob. d. Set the knob correctly
Field of view is obscured or not evenly illuminated	a. Light is not centered or condenser lens is not positioned correctly. b. Mirror selector lever is in an intermediate position. c. Revolving nosepieces is not in clicked position. d. Field iris diaphragm is not centered. e. ND filter is not in position f. Lamp bulb is not installed properly. g. Analyzer and/or polarizer are not installed correctly	a. Center light and even out illumination with condenser lens. b. Set the knob correctly. c. Lock in the position. d. Center the field iris diaphragm correctly and open fully. e. Set into correct position. f. Push halogen bulb terminals all the way into the holder g. Engage analyzer and polarizer into light path.
Dirt or dust in field of view	A. Dirt / dust on eyepiece B. Dirt/ dust on specimen	Clean thoroughly.
Image defocused / low resolution	A. Revolving nosepiece is not in correct position B. The surface of the objective is contaminated. C. Dirt / dust on specimen	A. Position nosepiece turret into the correct position B. Clean thoroughly.
One side of image is blurred.	A. Objective is not engaged properly.	Turn revolving nosepiece so that it engages properly

3601 E. 34th St. Tucson, AZ 85713 USA Tel. +1 520-882-6598 Fax +1 520-882-6599 email: pace@metallographic.com Web: http://www.metallographic.com

8.1 Trouble Shooting (Mechanical)

Problem	Cause	Solution
Coarse focus knob is hard to turn	Tension adjustment collar is too tight.	Loosen to proper tension.
Stage drifts down by itself or focus is lost during observation.	Tension adjustment collar is too tight.	Tighten collar to proper tension.
Cannot focus on specimen.	Stage height adjustment is to low.	Raise stage holder height.
Image shifts when stage is moved or touched.	Stage not properly mounted.	Clamp stage.
Field of view of one eye does not match that of the other eye.	Interpupillary distance is incorrect.	Adjust interpupillary distance.
Eye fatigue.	A. Incorrect eyepiece focus. B. Brightness too high.	A. Adjust eyepiece focus. B. Adjust bulb voltage.

8.2 Trouble Shooting (Electrical)

Problem	Cause	Solution
Lamp does not turn on	A. No power supply. B. Bulb installed incorrectly C. Bulb burned out. D. Connection of lamp housing power plug is incorrect. E. Power not turned on.	A. Check power cord B. Install bulb correctly C. Change the bulb D. Disconnect and reconnect E. Turn on power
Bulb burns out easily	A. Incorrect lamp. B. Oil from touching bulb.	A. Use recommend light and use lower voltage illumination. B. Use cotton gloves when installing new bulbs.

3601 E. 34th St. Tucson, AZ 85713 USA Tel. +1 520-882-6598 Fax +1 520-882-6599 email: pace@metallographic.com Web: http://www.metallographic.com

Part no.	Description	Images
	Electrical Components	
431-900	IM-3000 Lamp House	
431-803	IM-3000 6V/30W halogen light bulb	
IM-3000-Trans	IM-3000 transformer	
CORD-110	110V USA power cord	
CORD-220R	220V round prong power cord	
CORD-220F	220V flat prong power cord	

3601 E. 34th St. Tucson, AZ 85713 USA Tel. +1 520-882-6598 Fax +1 520-882-6599 email: pace@metallographic.com Web: http://www.metallographic.com

Part no.	Description	Images
	Optics	
431-303	IM-3000 yellow color filter	
431-313	IM-3000 blue color filter	
431-323	IM-3000 green color filter	
431-333	IM-3000 ground glass filter	
431-303	IM-3000 Polarizer	
431-503	IM-3000 Trinocular head	
431-513	IM-3000 high point, extra wide field eyepiece EW 10X/20	
431-523	IM-3000 EW15X eyepiece	

3601 E. 34th St. Tucson, AZ 85713 USA Tel. +1 520-882-6598 Fax +1 520-882-6599 email: pace@metallographic.com Web: http://www.metallographic.com

Part no.	Description	Images
431-533	IM-3000 EW20X eyepiece	
431-603	IM-3000 Nosepiece	
431-623	IM-3000 Infinite Plan Achromatic 4X/0.1 objective	
431-633	IM-3000 Infinite Plan Achromatic 10X/0.25 objective	
431-643	IM-3000 Infinite Plan Achromatic 20X/0.4 objective	
431-653	IM-3000 Infinite Plan Achromatic 40X/0.6 objective	

3601 E. 34th St. Tucson, AZ 85713 USA Tel. +1 520-882-6598 Fax +1 520-882-6599 email: pace@metallographic.com Web: http://www.metallographic.com

Part no.	Description	Images
431-663	IM-3000 Infinite Plan Achromatic 50X/0.75 objective	
431-683	IM-3000 Infinite Plan Achromatic 100X/0.9 objective	
431-713	IM-3000 1X C-mount digital camera adapter	
431-723	IM-3000 0.5X C-mount digital camera adapter	

3601 E. 34th St. Tucson, AZ 85713 USA Tel. +1 520-882-6598 Fax +1 520-882-6599 email: pace@metallographic.com Web: http://www.metallographic.com

Part No.	Mechanical	Images
431-403	IM-3000 mechanical stage	
	?? Stage plate for mechanical stage	
	?? Stage plate for mechanical stage	
	?? Stage plate for mechanical stage	
	10 mm round stage plate	
	15 mm round stage plate	
	25 mm round stage plate	
IM3-COVER	IM-3000 Microscope plastic cover	
418-010 **418-001**	0.1 mm calibration slide |0.01 mm calibrations slide	